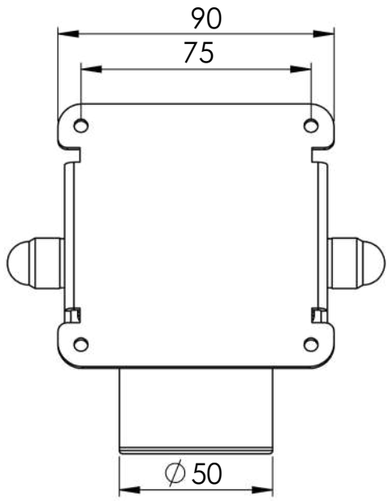

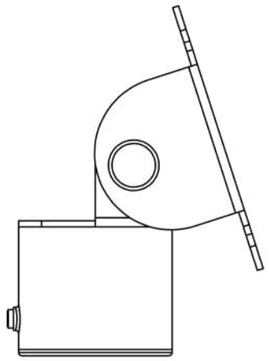

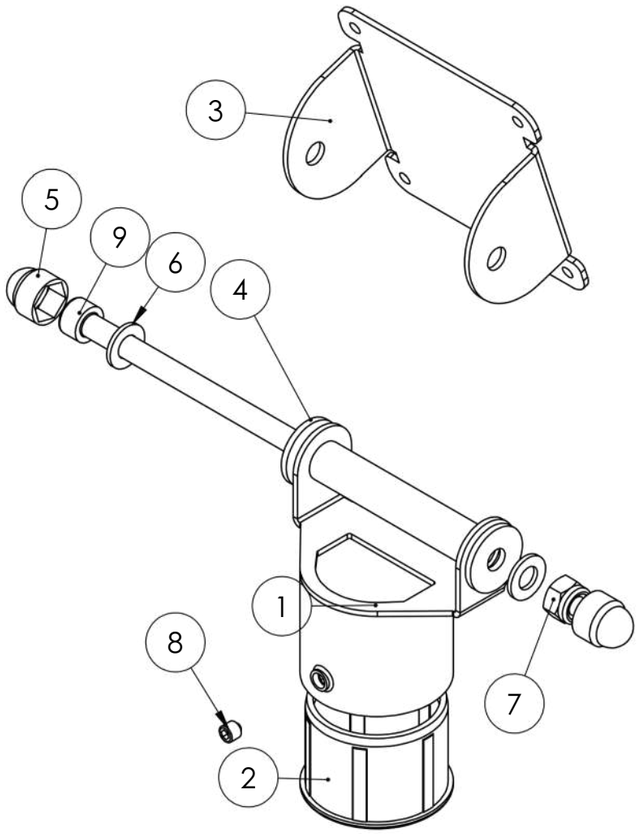

IMAGO

UNLESS OTHERWISE SPECIFIED: DIMENSIONS ARE IN MILLIMETERS SURFACE FINISH: TOLERANCES: LINEAR: ANGULAR:	FINISH:				DEBURR AND BREAK SHARP EDGES	DO NOT SCALE DRAWING	REVISION A-02
	NAME	SIGNATURE	DATE			TITLE: VH-1-45-E	
DRAWN							
CHK'D							
APPV'D							
MFG							
Q.A				MATERIAL: - mm		DWG NO. VH-1-45-E	A3
				WEIGHT:		SCALE:1:2	SHEET 1 OF 1