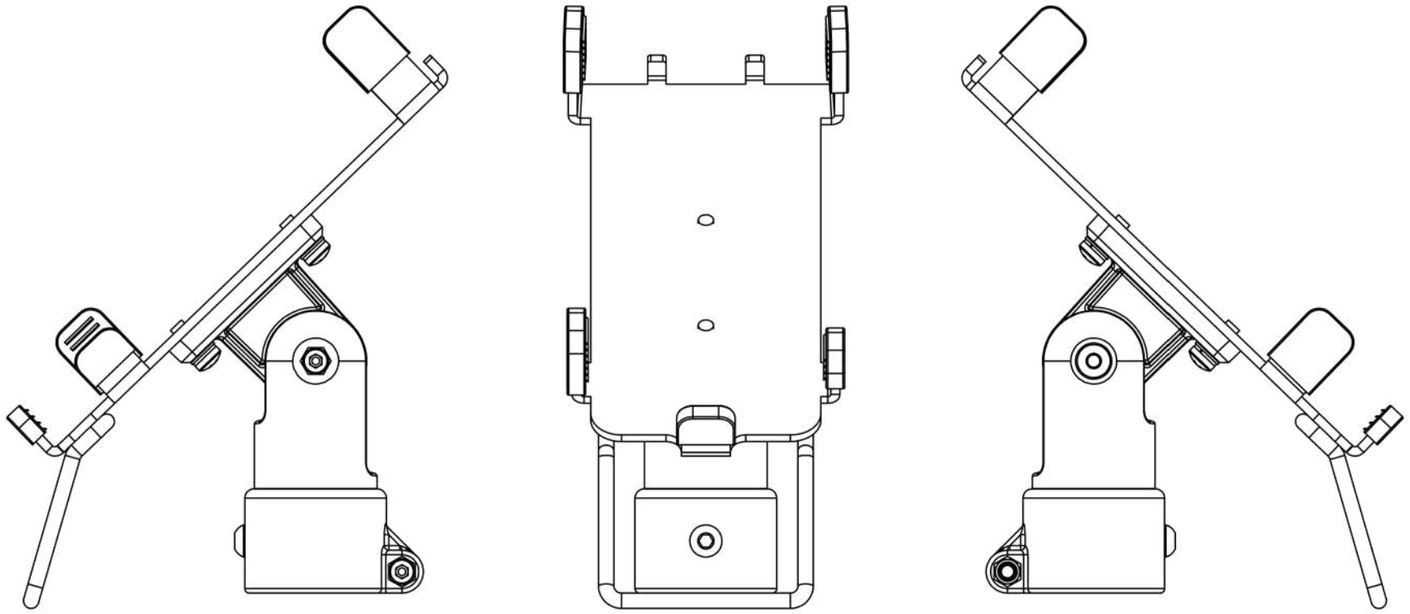

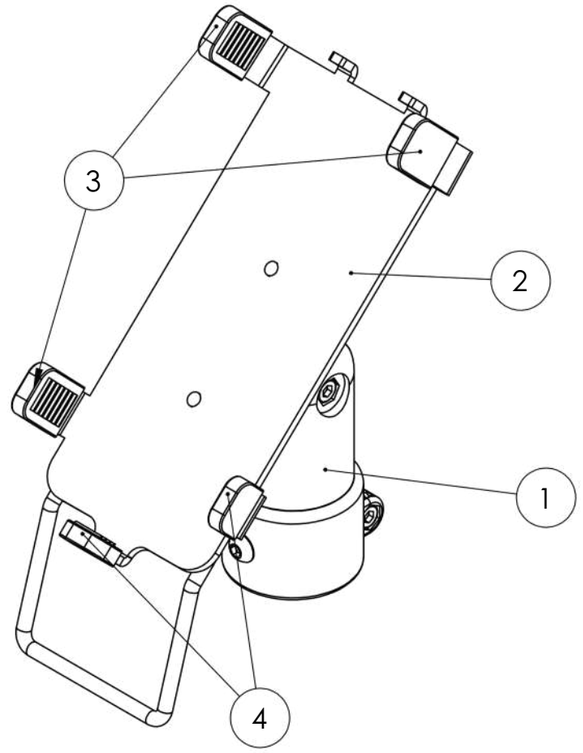

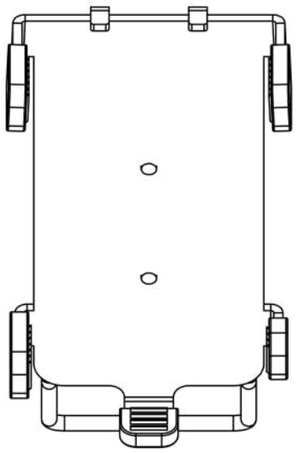

IMAGO

UNLESS OTHERWISE SPECIFIED: DIMENSIONS ARE IN MILLIMETERS SURFACE FINISH: TOLERANCES: LINEAR: ANGULAR:	FINISH:		DEBURR AND BREAK SHARP EDGES	DO NOT SCALE DRAWING	REVISION A-02
	NAME	SIGNATURE	DATE	TITLE:	
DRAWN			2018-01-05	PINH-Vx520-38	
CHK'D					
APPV'D					
MFG					
Q.A				MATERIAL: - mm	DWG NO. PINH-Vx520-38 A3
				WEIGHT:	SCALE:1:5 SHEET 1 OF 1