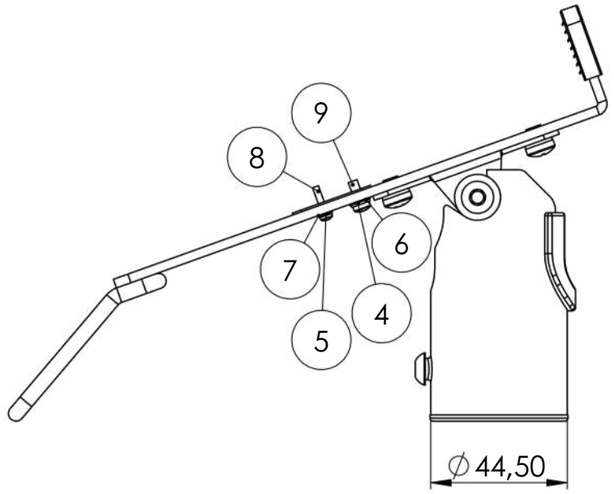


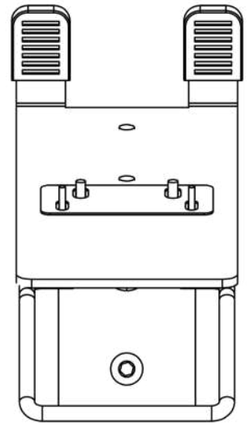

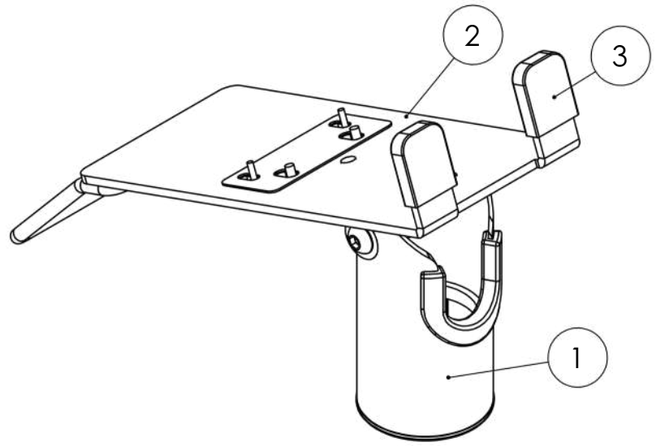


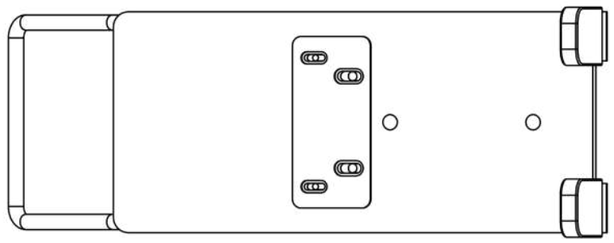

IMAGO

| | | | | | | |
|---|---|---|---|---|---|---|
| UNLESS OTHERWISE SPECIFIED:<br>DIMENSIONS ARE IN MILLIMETERS<br>SURFACE FINISH:<br>TOLERANCES:<br>LINEAR:<br>ANGULAR: | FINISH: | | | DEBURR AND BREAK SHARP EDGES | DO NOT SCALE DRAWING | REVISION A-01 |
| | NAME | SIGNATURE | DATE | | TITLE: PINH-VX820-38 | |
| DRAWN | | | | | | |
| CHK'D | | | | | | |
| APPV'D | | | | | | |
| MFG | | | | | | |
| Q.A | | | | MATERIAL: - mm | DWG NO. PINH-VX820-38 | A3 |
| | | | | WEIGHT: | SCALE:1:5 | SHEET 1 OF 1 |